PRELIMINARY DRAWING

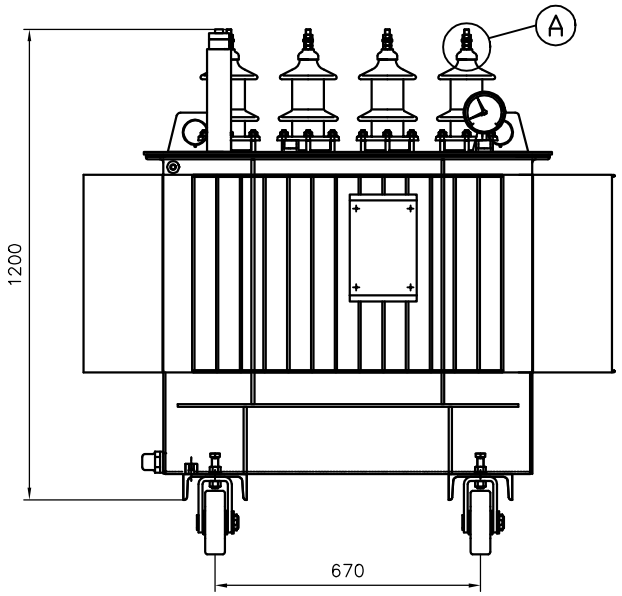

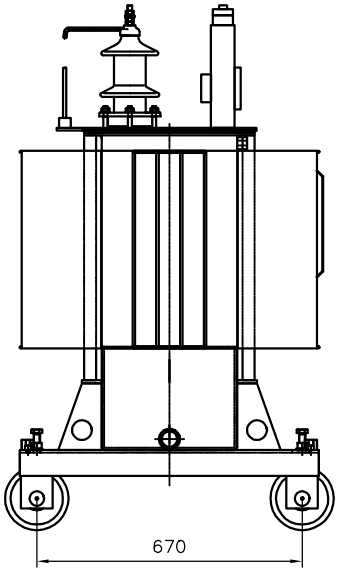

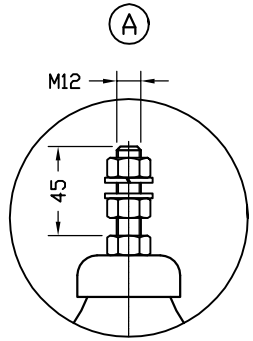

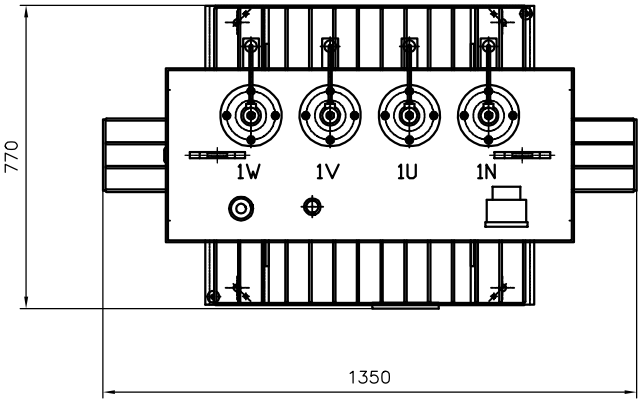

TEGE0315/10kV/ZN/DB-24h
1200x1350x770 - height x lenght x width
Total weight - approx. 900kg
Oil weight - approx. 200kg

NR.	MODIFICATION	DATE	NAME			ORIGINAL	REPLACEMENT
.				DATE	7.4.2008		
.				DRAWN	Procházka		
				VERIFIED	Maňhal		

EGE

TEGE0315

SHEET 1
1